MANUAL No. ETM 50

SMITHS Radiomobile

OWNERS MANUAL

***transistor-powered* CAR RADIO**

MANUALLY TUNED MODELS FOR EITHER
MEDIUM WAVE ONLY
OR
MEDIUM AND LONG WAVE RECEPTION

MODELS 50T & 51T (MEDIUM & LONG WAVE 12v.)
MODELS 52T & 52TC (MEDIUM WAVE ONLY 12v.)

Owners Service Data for Medium and Long Wave Transistor Powered Car Radio

Sufficient information is contained in this manual to enable a competent radio mechanic to effect all normal repairs to these sets.

RECEIVER TYPES:

50T	12-volt positive polarity, Medium and Long Waves.
51T	12-volt positive or negative polarity, Medium and Long Waves.
52T	12-volt positive or negative polarity, Medium Wave only.
52TC	12-volt positive or negative polarity, Medium Wave only. With tone control.

Total current consumption 1.2 amps. with 14-volt supply.

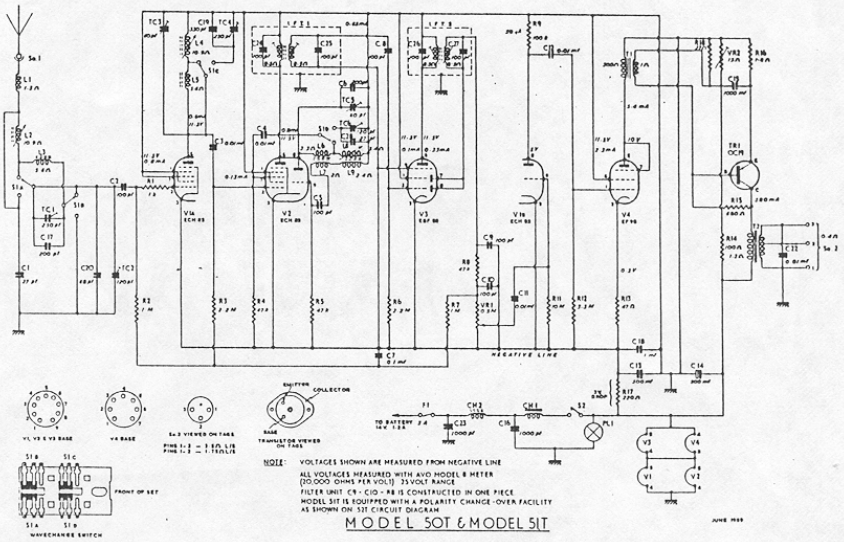

MODEL 50T & MODEL 51T

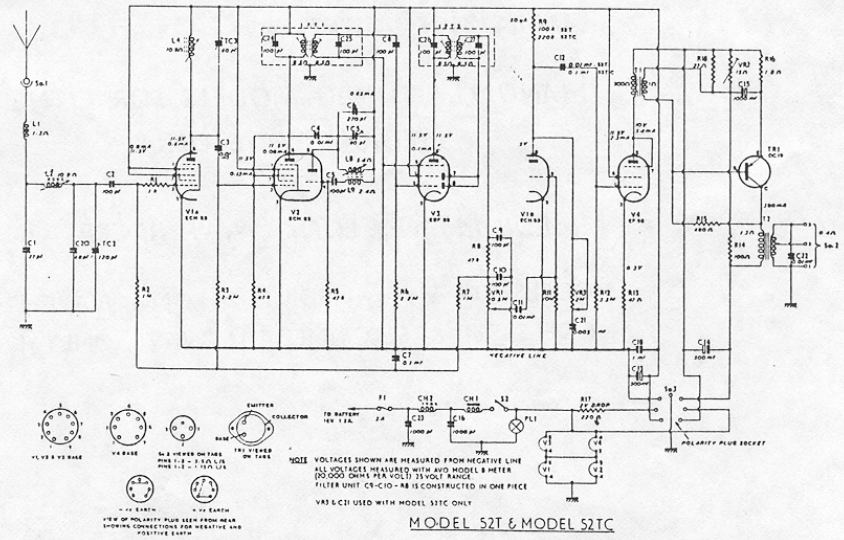

MODEL 52T & MODEL 52TC

TECH PUBL dbh PRINTED IN ENGLAND JULY 1968

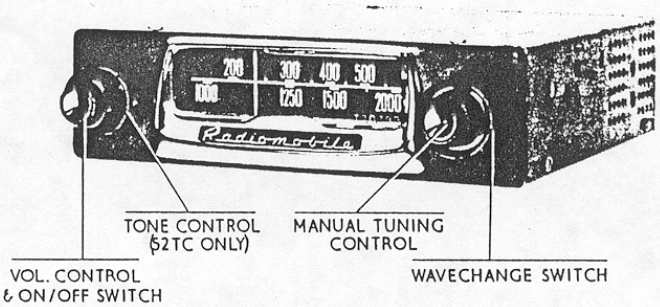

GENERAL VIEW OF UNIT SHOWING CONTROLS

THE COMBINED VOLUME CONTROL AND ON/OFF SWITCH switches on the receiver when turned clockwise, and progressive rotation of this control increases the volume. When turned fully anti-clockwise, the receiver is turned off.

THE MANUAL TUNING CONTROL provides variable station selection.

THE TONE CONTROL (Model 52TC only) is concentric with the volume control and provides selective tone correction for the reproduction of either speech or music. This control is continuously variable and when turned fully clockwise the amount of bass reproduction is reduced; when turned fully anti-clockwise the treble reproduction is reduced.

THE WAVEBAND SWITCH (Models 50T & 51T only) is concentric with the tuning control, and its two positions are marked M and L for instant identification.

The following notes should be carefully read before beginning the servicing of these car radios in order to avoid damaging the transistor-powered output stage.

1. If the voltage polarisation is accidently reversed the transistor will be damaged.
2. Power supply should always be an accumulator except when a well regulated and ripple free mains unit is available.
3. As all the valves and the transistor operate from a 12-volt supply it is difficult to make operational tests and a suspect valve or transistor should be checked by substitution.
4. Always switch off the receiver before connecting or disconnecting any of the transistor leads, and also disconnect the transistor before making any continuity tests.

TRANSISTOR REPLACEMENT

1. Check that the transistor is free from metal burrs, which could damage the mica insulator.
2. A coating of silicone grease (RMO.1999) should be applied to both sides of the mica insulator, to ensure maximum heat transfer.
3. Place mica insulator in position and ensure that the transistor fixing bolts are firmly tightened on the heat sink.
4. Place VR2 slider in minimum current position, *i*.e. slider moved towards H.F. chassis.
5. Resolder leads to transistor, firmly gripping the wires from the transistor with a pair of pliers which will form a heat shunt thus avoiding any overheating of the transistor.

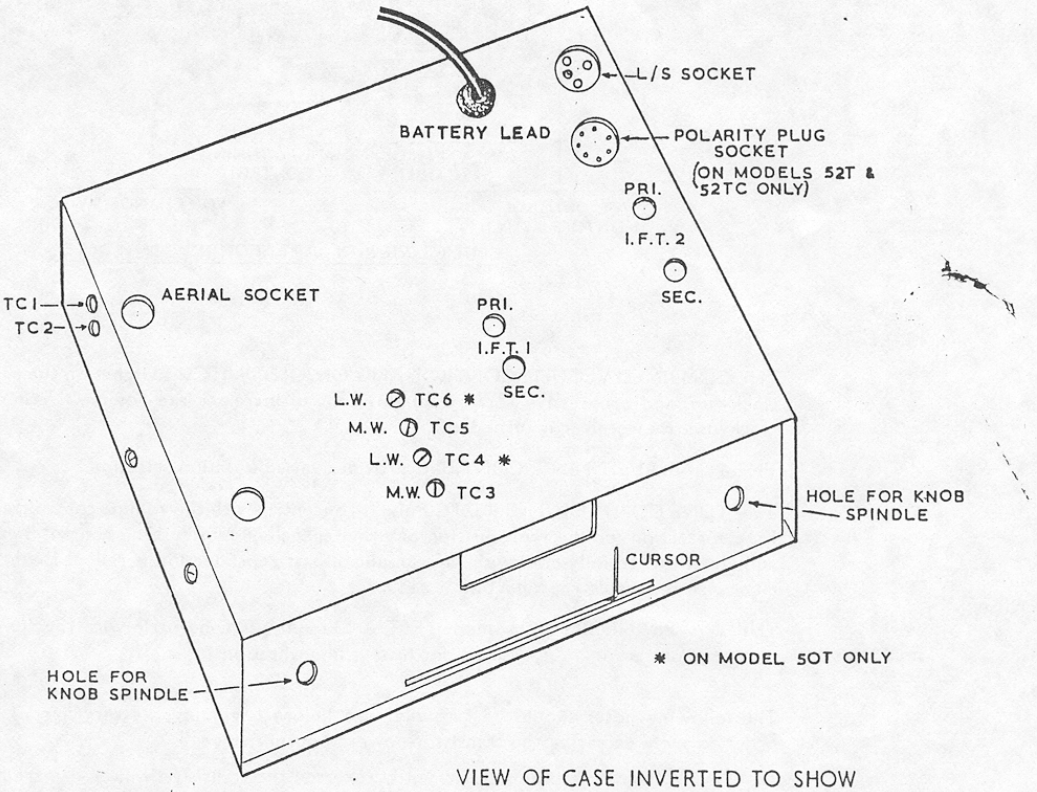

VIEW OF CASE INVERTED TO SHOW ACCESS HOLES

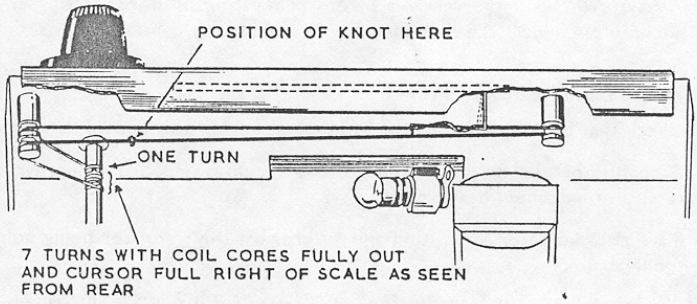

VIEW OF CORD DRIVE MECHANISM

TRANSISTOR CURRENT ADJUSTMENT

With the supply voltage at 14 volts the transistor current should measure 380 mA. Measurement is taken between yellow lead and its connection on the transistor. Any required adjustment is made on VR2, the slider being sealed on the paxolin side when the current is correctly adjusted, using wax or any other suitable adhesive.

I.F. ALIGNMENT

1. Apply 470 Kc/s modulated 30% at 400 c/s between Pin 2 of V2 and chassis. (Through an 0.1 mfd capacitor.)
2. Volume control to maximum. Switch to M.W.; set tuning carriage so that cores are fully withdrawn from coils.
3. With suitable signal input adjust I.F.T.2 Sec., I.F.T.2 Pri., I.F.T.1 Sec., I.F.T.1 Pri., in that order for maximum output. Repeat sequence for maximum output.

R.F. ALIGNMENT

The requisite dummy aerial comprises a 22 pfd capacitor in series and a 47 pfd shunt capacitor. (Radiomobile Part No. RMO.426A.)

M.W. ALIGNMENT

1. Set wavechange switch to 'M' and tuning carriage to fully withdrawn position, ensuring that cores are screwed anti-clockwise back into grommets.
2. Set ferrite auxiliary rods (on L2 and L4) to mid position.* (See below).
3. Connect signal generator to aerial input (through dummy aerial).

Operation	*Carriage Position*	*Generator* Kc/s	M	*Adjust for Maximum Output*
1	Tuning carriage fully out	1610	186	TC2, TC3, TC5
2	Tuning carriage fully in	520	577	L8/L9
3	Tune in	1100	272	L2 and L4
4*	Tune in	550	545	Auxiliary Rods in L2 and L4
5	(Repeat operation 3 and 4)			

* This operation must only be carried out when L2 and/or L4 has been replaced. After adjustment ensure that auxiliary rods are sealed with wax.

M.W. SENSITIVITY

Check input for 200 mW output.
600 Kc/s not less than 108 dbs below 1 volt (4 microvolts).
1550 Kc/s not less than 108 dbs below 1 volt (4 microvolts).

L.W. ALIGNMENT

1. Set wavechange switch to 'L' and carriage to fully withdrawn position.
2. Connect Signal Generator to Aerial Input (through Dummy Aerial).

Operation	*Carriage Position*	*Generator* Kc/s	M	*Adjust for Maximum Output*
1	Fully in (pointer extreme right)	150	2000	TC6
2	Fully out (pointer extreme left)	300	1000	L6/L7
	(Repeat operation 1 & 2 until no further improvement results)			
3	Tune to Freq.	270	1110	TC1, TC4

L.W. SENSITIVITY

Check input for 200 mW output.
180 Kc/s not less than 100 dbs below 1 volt (10 microvolts)
260 Kc's not less than 100 dbs below 1 volt (10 microvolts)

General Information

Smiths Radiomobile Service

All enquiries about your car-radio will be handled with efficiency and speed by your Radiomobile Distributor or by the Dealer who sold it originally. These official representatives of Smiths Radiomobile have an expert knowledge of Radiomobile equipment and performance, and will supply genuine replacement parts from their own stocks.

Conditions of Guarantee

The conditions of guarantee for Smiths Radiomobile Car-Radio in countries outside Great Britain and Northern Ireland are defined individually by the official Smiths Radiomobile Distributors in those countries. You can obtain full terms of these conditions from either the Distributors concerned or the Dealer who sells the equipment.

Service under Guarantee

1. All normal applications for service under guarantee should be made either to the appropriate Smiths Radiomobile Distributor or to the Dealer from whom your equipment was originally bought.

2. If you cannot get in touch with an official Smiths Radiomobile representative, any reputable car-radio service station should be competent to examine your equipment, with the help of the technical section of this Manual. S. Smith & Sons (Radiomobile) Ltd., cannot accept any liability for labour costs, but free replacement components will be dispatched at once if you make a valid application direct to our Export Department, Cricklewood Works, London, N.W.2. Your application must also give full details of your car-radio, including particulars and date of purchase, Model or Type No., circuit reference of defective part/s and details of the vehicle to which it is fitted.

S. SMITH & SONS (RADIOMOBILE) LIMITED, CRICKLEWOOD WORKS, LONDON, N.W.2.
Telephone : GLAdstone 3333. Telegrams : Mobilerad, Telex, London.

Distributed by:

Printed in England. Aug. 1959

SMITHS Radiomobile

Installation Instructions

VEHICLE: TRIUMPH SPORTS (REVISED)

Radio: 50T, 51T, 52T, 500T, 501T, 502T. 40T, 41T, 42T, 400T, 401T, 402T.

Note: Install Models in the 50T and 500T Series as detailed for the corresponding Model in the Model 40T or 400T Series.

INTRODUCTION.

This instruction covers both left and right-hand drive cars.

NOTE: Models 41T, 42T, 401T, 402T

Before connection to power supply, ensure that "POSITIVE GROUND" POLARITY PLUG is inserted in POLARITY SOCKET. (Undersurface of 41T, 42T, - Side of 401T, 402T).

DAMAGE TO AMPLIFIER IS INEVITABLE IF POLARITY IS REVERSED.

The Control or Radio Unit and Loudspeaker Assembly is mounted on the gear box housing.

The Amplifier Unit is mounted as part of the above assembly.

The Aerial is mounted in the right hand side wing.

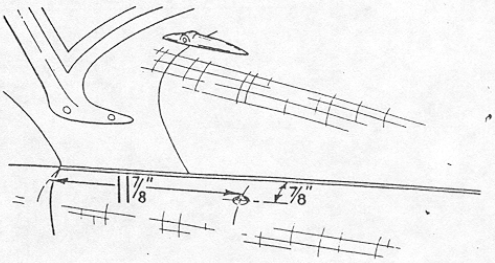

Fig. 1.

AERIAL MOUNTING.

1. Ease down carpet trim covering large hole in right hand kick panel.
2. Mark off and cut a $\frac{7}{8}$" dia. hole in wing at position shown in Fig. 1. and assemble aerial to wing.
3. Remove plug in kick panel near aerial and route aerial lead through to control unit location.
4. Replace carpet.

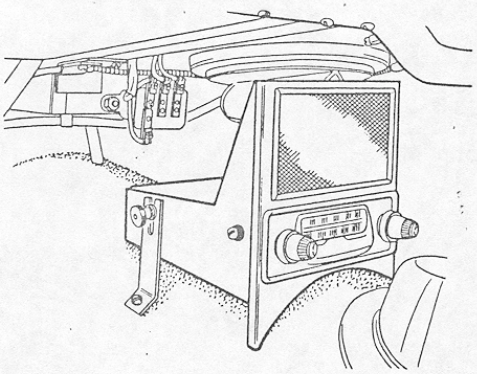

Fig. 2.

RADIO AND LOUDSPEAKER MOUNTING

1. If a heater is fitted, close heater doors.
2. Place assembly on gear box housing in position shown in Fig. 2.
3. Plug in aerial lead.
4. Check hand brake and gear lever (first gear) operation and adjust assembly position to clear.

NOTE: The loudspeaker magnet should limit opening of heater doors so that hot air flow is directed away from Radio Unit.

5. Adjust rear brackets position to meet gear box housing, mark off and drill two $\frac{1}{8}$" dia. holes and secure assembly to housing with the two chrome head PK screws provided.
6. Route battery lead through main cable grommet to Control Box and connect to A1 terminal.

SUPPRESSION.

All Models

1. Fit a 1 mfd capacitor to dynamo output terminal. Earth to dynamo mounting bracket.

Models 400T, 401T, 402T

2. Fit a 1 mfd capacitor to 'SW' terminal on coil. Earth to coil mounting bracket.

3. Fit a 1 mfd capacitor (wire ended) across windscreen wiper motor terminals.

AERIAL TRIMMER

Switch on receiver and tune to a weak signal on 1200 Kc/s (250 metres) approximately and adjust aerial trimmer for maximum volume.

ASSEMBLY OF UNIT FOR 40T, 41T, & 42T.

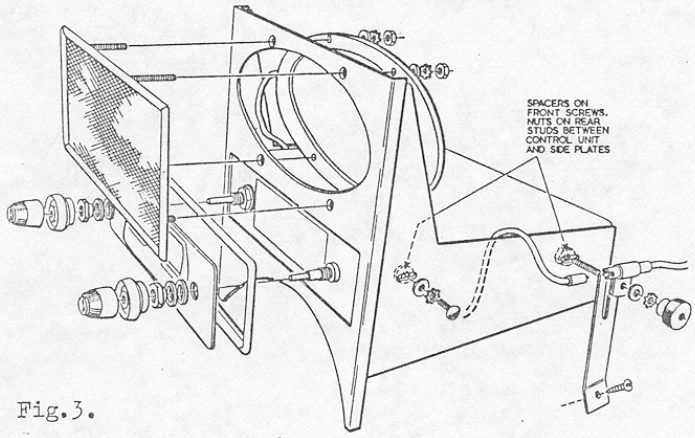

Fig.3.

ASSEMBLY OF UNIT FOR 400T, 401T, 402T

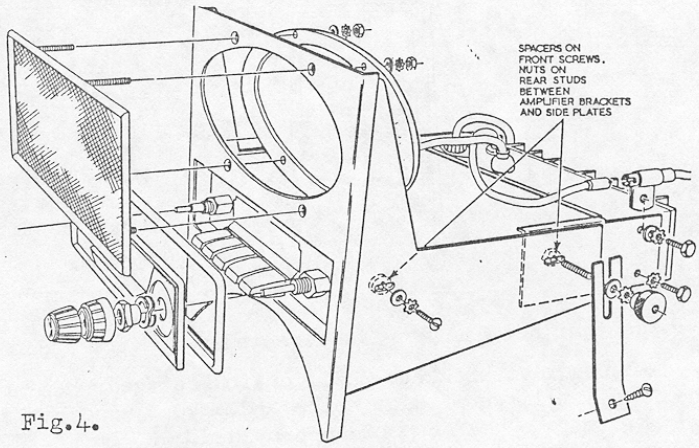

Fig.4.

Published by Smiths Radiomobile.
Printed in England.

No. F/ST11.
February, 1959.

SMITHS Radiomobile

supplement to installation instructions

VEHICLE:- TRIUMPH SPORTS (REVISED)

Radio: 50T, 51T, 52T, 500T, 501T, 502T. 40T, 41T, 42T, 400T, 401T, 402T.
Note: Install Mode's in the 50T and 500T Series as detailed for the corresponding Model in the Model 40T or 400T Series.

INTRODUCTION.

This supplement refers to Installation Instructions No.F/ST11 - February 1959 and covers a change in Aerial Mounting procedure.

The large hole in the right hand kick panel has been deleted on cars produced as from 6/4/59 and the aerial should be mounted as follows:-

AERIAL MOUNTING.

(1) Remove closing plate behind right side front wheel (Six $\frac{1}{4}$" screws).

(2) Mark off and cut a $\frac{7}{8}$" diameter hole in wing at position shown in Fig. 1. (F/ST11), and assemble aerial to wing.

(3) Remove plug in kick panel near aerial and route aerial lead through to control unit location.

(4) Refit closing plate.

Published by Smiths Radiomobile. No. F/ST11/S.

Printed in England. April, 1959.

SMITHS Radiomobile

Goodwood Works,
North Circular Road,
London, N.W.2.
Telephone: GLAdstone 0171

GUARANTEE REGISTRATION CARD

Date of Purchase..... Model No.....

Control Unit No..... Amplifier Type.....

Owner's Name (Mr., Mrs., or Miss).....

Address .....

.....

Supplied by .....

Address .....

.....

Installed by .....

Address .....

.....

The above mentioned Car Radio Receiver has been delivered and installed to my satisfaction.

Signature of Purchaser.....

Signature of Dealer.....

IMPORTANT

Owners not resident in Great Britain & N. Ireland.

To obtain warranty, send or take this card immediately to the RADIOMOBILE car radio distributor in your country. The address can be obtained from the dealer who supplied your car. In case of any difficulty, please write direct to :—

SMITHS RADIOMOBILE
Export Department,
Cricklewood Works, London,
N.W.2., England.

Aerial Make .....

Type .....

Vehicle Make .....

Year .....

Model .....

TO PURCHASER
Please retain this
your own safe



TERMS OF GUARANTEE

S. Smith & Sons (Radiomobile) Ltd., guarantee this receiver against failure arising through faulty workmanship or material for a period of six calendar months from date of purchase. During this period, subject to the conditions stated, the Company will replace or repair any defective part free of charge if the instrument is returned to the works or to any of the Company's dealers.

RECEIVER GUARANTEE

1 The guarantee is applicable only to the original purchaser who has purchased from an accredited Smiths Radiomobile dealer at the Company's published retail selling price, or to the purchaser of a new vehicle which is fitted with a Smiths Radiomobile Receiver as standard equipment or optional extra, and any claim must give particulars of the serial number, type and date of purchase.

2 The Guarantee will be rendered invalid (a) if the instrument is misused or (b) if any unauthorised alteration, modification or substitution of any part or parts of it be made, (c) if any service is given during the Guarantee period at any place other than the Company's premises or the premises of one of the Company's dealers, or (d) if the serial number be defaced or altered.

VALVE GUARANTEE

A The valves used are Guaranteed by the valve manufacturer for a period of three calender months from the date of purchase. This Guarantee is given only in respect of faulty workmanship and material and does not cover misuse or consequential damage.

B Claims under this Guarantee will only be considered if the valve is returned through a Smiths Radiomobile dealer, and is accompanied by an official B.V.A. claim form.

IMPORTANT NOTICE

- Claims under this Guarantee should, in the first instance, be made to a Smiths Radiomobile dealer, who should be able to locate the trouble and often apply a quick remedy. He will also be able to advise if the fault is due to some part of the installation outside the instrument itself, and not covered by the Guarantee.
- This Guarantee does not cover removal of motor noise, tyre static, or other electrical interference, nor does it cover the correction of faulty installation.
- Any labour, carriage or packing costs incurred in the replacement of faulty materials are not covered by the terms of this Guarantee, and are chargeable.
- This card must be presented with the equipment when service is required, as no Guarantee service can be rendered without it.
- To prevent delay in replying to queries, this card should always be enclosed with any correspondence to the Company. Its safe return to you is assured.

Ref. No. R837/2. Printed in England, March, 1960

The following pages were reprinted in a Triumph newsletter, although I am not sure of the exact publication. They include both supplemental information from Smiths, as well as some bracket measurements that may have been original material as published in the newsletter.

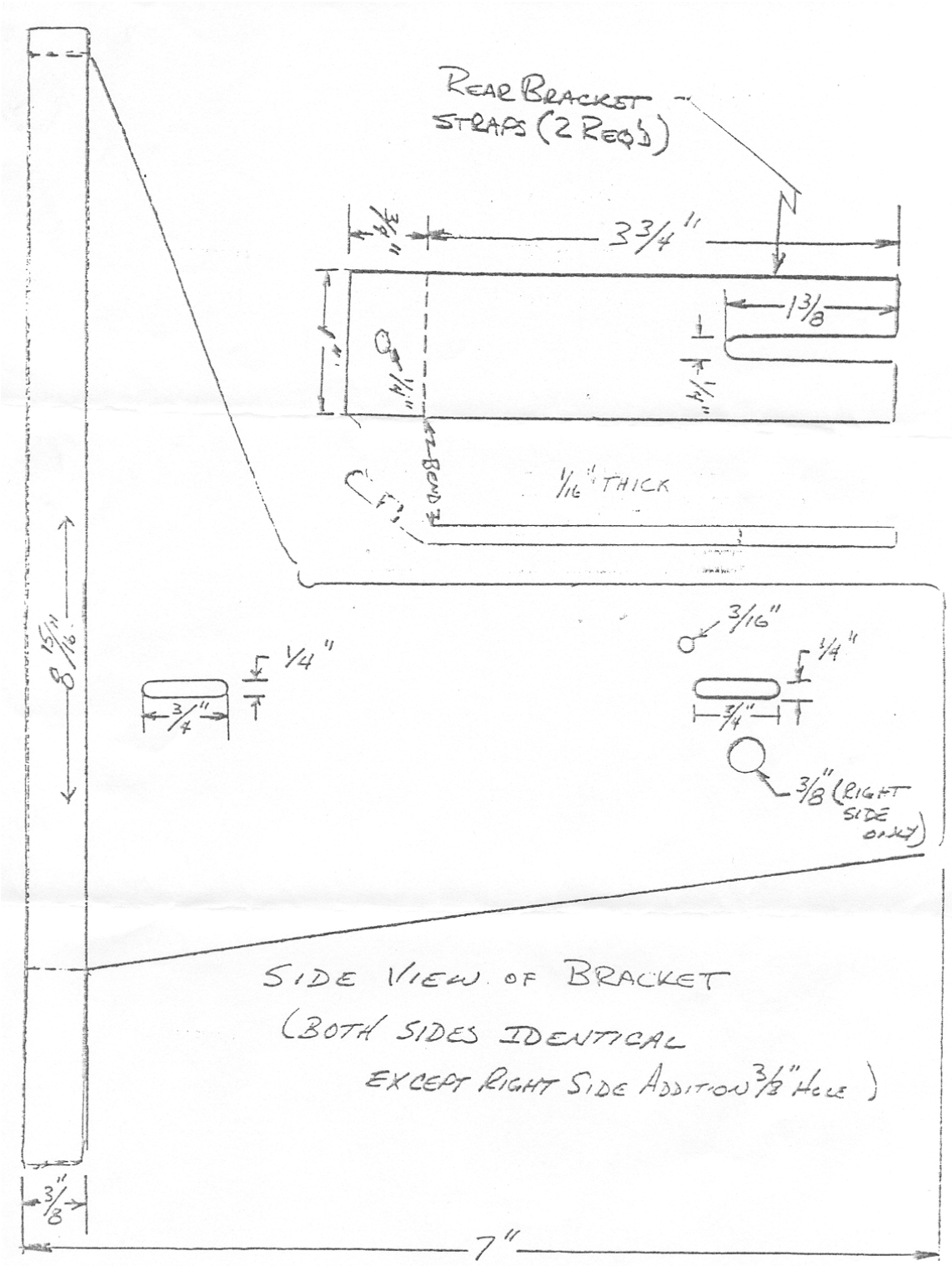

SIDE VIEW OF BRACKET
(BOTH SIDES IDENTICAL
EXCEPT RIGHT SIDE ADDITION 3/8" HOLE)

SMITHS Radiomobile
installation instructions

MODELS: 600T, 601T, 602T, 620T, 622T.

These models may in general be installed in a similar manner to that recommended for model 40T/50T series with the exception of the following details:-

(1) DUAL POLARITY MODELS 601T, 602T, 620T, and 622T.

Ensure that the unit is adjusted to suit supply conditions on vehicle. See instructions on unit case for access to internal polarity change-over plug.

WARNING:

Damage to transistors is inevitable if polarity is incorrect.

(2) AERIAL TRIMMER.

In order to obtain maximum performance from the unit IT IS ESSENTIAL that the aerial trimming procedure (as recommended for models 40T/50T series) is carried out.
The trimmer is located on underneath of the unit on right-hand side. Its position may make it inaccessible after installation in the vehicle, and in these cases the trimming procedure must be carried out prior to final installation.

(3) SUPPLY LEAD.

Supply connection to the unit is by means of a flat blade connector on the underneath side of unit at left-hand side.

(4) FIXING SCREWS.

WARNING: - LIMITED INTERNAL CLEARANCE.

Internal damage may be caused if the screws used to secure the unit are of such length that more than $\frac{1}{4}$" will protrude inside the case of the unit.

(5) REAR UNDERNEATH FIXING.

The rear underneath fixing bush is located approximately $\frac{3}{4}$" nearer the front of the unit than on model 40T/50T series. In installations employing this fixing point, use of brackets supplied for model 40T/50T series would only be possible after carrying out suitable modifications.

Published by Smiths Radiomobile. No. F/CI-05
Printed in England. July, 1961.

SMITHS Radiomobile
installation instructions

MODELS: 60T, 62T.

These models may in general be installed in a similar manner to that recommended for model 40T/50T series with the exception of the following details:-

1. DUAL POLARITY

Ensure that the unit is adjusted to suit supply conditions on vehicle. See instructions on unit case for access to internal polarity change-over panel.

WARNING:

Damage to transistors is inevitable if polarity is incorrect.

2. AERIAL TRIMMER

In order to obtain maximum performance from the unit IT IS ESSENTIAL that the aerial trimming procedure is carried out as follows:- Switch on set and tune to a weak signal on 1200 Kc/s (250 metres) approximately and adjust aerial trimmer for maximum volume. The trimmer is located at front of radio alongside the tuning spindle, and access to it may be obtained by pulling off tuning knob and knob escutcheon (leading spindle nut secure) .

3. CONNECTIONS TO RADIO

The aerial and loudspeaker sockets, and battery supply connection are at the ends of short built-in fly leads at the rear of the unit.

4. REAR UNDERNEATH FIXING

The rear underneath fixing bush is located 1 7/16" nearer the front of the unit than on model 40T/50T series. In installations employing this fixing point, use of brackets supplied for model 40T/50T series will generally be possible by the use of adaptor parts group M.40. This consists of the following items:-

Adaptor bracket	11-040-01
Screw 10 UNF x 3/8" Hex.Hd.	RMO 1358
Washer 3/16" S'proof	RMO 4005

This parts group will be included in relevant accessory kits until supplies of suitably modified rear support brackets are available.

Published by Smiths Radiomobile.
Printed in England.

No. F/GI-05
October, 1962.